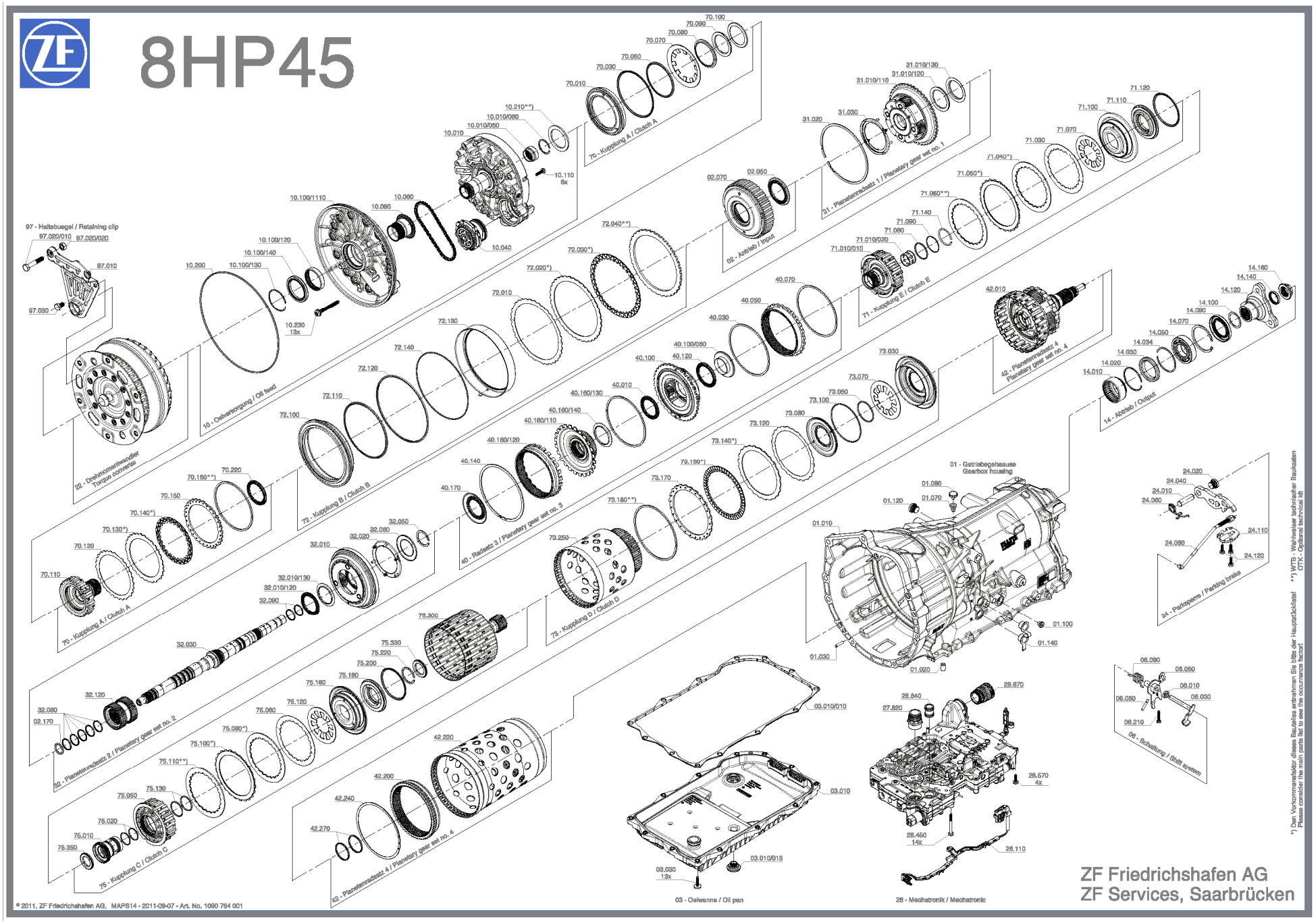JP (Automatic Transmissions) Ltd